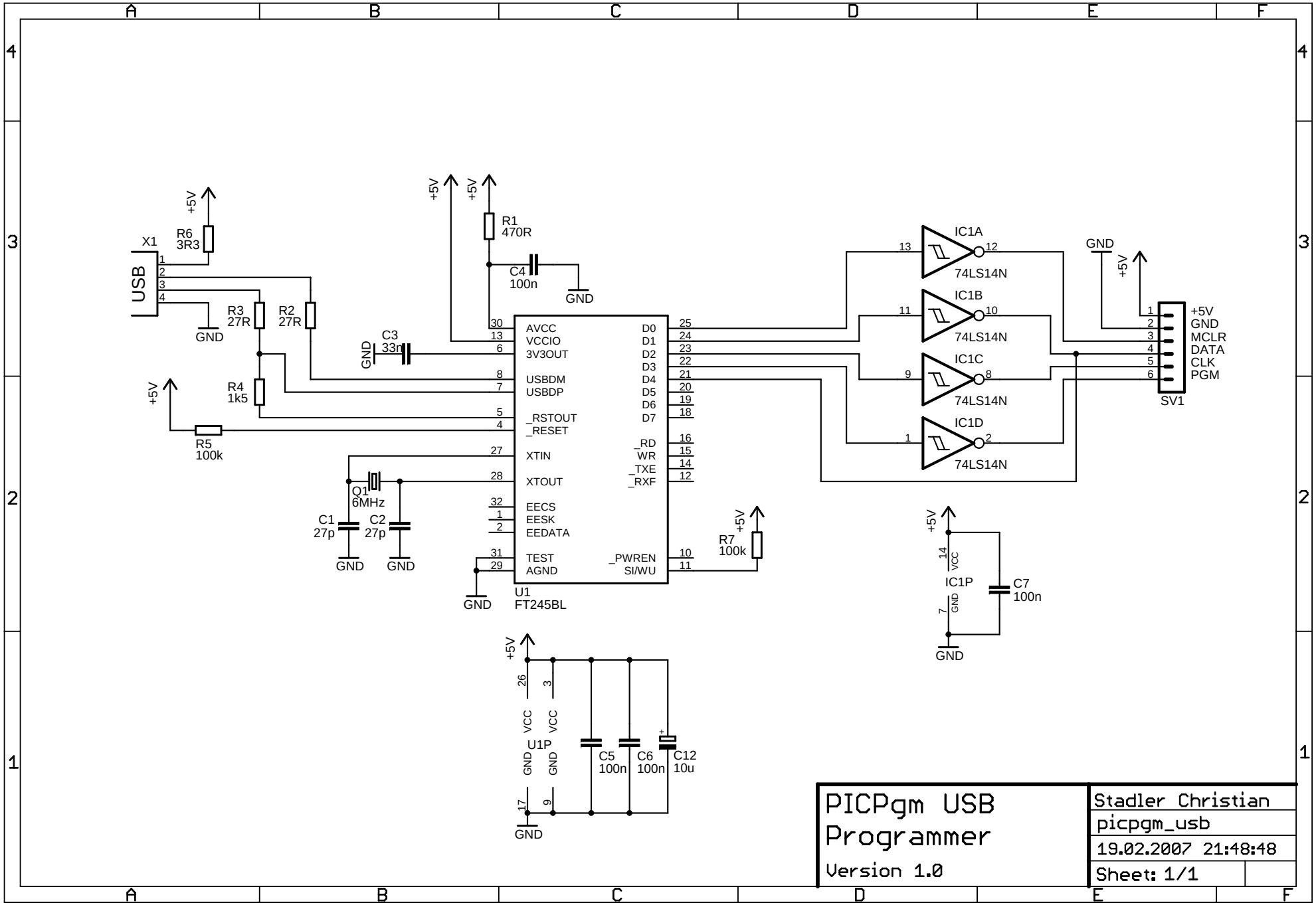
X1
USB
R6
3R3
R3
27R
R2
27R
R4
1k5
R5
100k
R1
470R
C4
100n
C3
33n
Q1
6MHz
C1
27p
C2
27p
R7
100k
U1
FT245BL
AVCC
VCCIO
3V3OUT
USBDM
USBDP
_RSTOUT
_RESET
XTIN
XTOUT
EECS
EESK
EEDATA
TEST
AGND
D0
D1
D2
D3
D4
D5
D6
D7
_RD
WR
_TXE
_RXF
_PWREN
SI/WU
IC1A
IC1B
IC1C
IC1D
74LS14N
SV1
+5V
GND
MCLR
DATA
CLK
PGM
IC1P
C7
100n
U1P
C5
100n
C6
100n
C12
10u
PICPgm USB
Programmer
Version 1.0
Stadler Christian
picpgm_usb
19.02.2007 21:48:48
Sheet: 1/1